SULZER

Decades of experience packed into one small control and monitoring module

ABS pump controller PC 441

Raising pump control and monitoring to a higher level

The new ABS pump controller PC 441 is yet another phase of the ABS EffeX Revolution, which involves advancing technology to reduce energy consumption and increase equipment efficiency and reliability for the wastewater industry. By further improving our existing control and monitoring system, already the best of its type in the world, the ABS pump controller PC 441 designed primarily for municipal pumping stations now offers several major benefits.

The introduction of the ABS pump controller PC 441 now completes the ABS range of control and monitoring systems.

Control and monitoring of up to 4 pumps and additional equipment

Studies have shown that 30%–50% of the energy consumed by pump systems could be saved through changes to equipment or control systems. This is now achieved by the ABS pump controller PC 441, which controls and monitors from 1 to 4 submersible pumps. It can also be used as a stand-alone monitoring unit.

This pump controller is designed mainly for use in municipal wastewater pumping stations. Its many advanced features minimize operational costs and increase the availability of pumping stations and networks throughout their complete life cycles.

Examples of additional equipment that can be linked to the ABS pump controller PC 441 are submersible mixers and drainage pumps.

Complete surveillance of pumps and station

The ABS pump controller PC 441 has built-in capacity for advanced in/outflow calculation and both pump capacity and overflow calculations. The unit also allows analog and event history logging:

Analog signals:

15 days, 16 channels and 1 min sample interval

Digital signals and alarms:

4096 time-stamped events

Unique control functions reduce energy consumption and servicing

Many advanced features of the ABS pump controller PC 441 can be used stand-alone or combined to minimize energy consumption and maximize station availability. Good examples of these benefits are:

- Tariff control that can pump down and shift start/stop levels depending on energy cost and required sump volume at estimated high load.
- Random start/stop levels, reducing fat build up and production of sulfuric acid.
- Asymmetric alternation increases the security of available pump capacity and can also be used to address problems with pump clogging caused by debris/sludge build-up in problem stations.

Greater functionality increases efficiency of pump, station and network

Some well known-problems in stations and networks can be solved without using advanced remote control and decision-making software. One good example of this is the built-in Delta start function in the ABS pump controller PC 441.

For example, during heavy rainfall, several stations will fill up more or less simultaneously resulting in a high hydraulic loads and peaks in energy consumption and workload on the treatment plant.

By detecting a quick change in wastewater level we can decide to start and/or stop pumps before preset start/stop levels are reached! The total amount of sewage pumped will be the same (if not overflowing) but it will be spread out over a longer time period.

Future-proof technology easily accessed remotely via ABS AquaProg

When using the ABS AquaProg software program, all settings, status and logged values can be viewed/collected and restored, either locally or remotely. If new functions are added or improved, the software (firmware) can be downloaded via a PC using ABS AquaProg software.

All modules in the PC 441 concept communicate via the CAN protocol and any suitable additional units will also support this protocol. The ABS pump controller PC 441 communicates with other telemetry or SCADA systems via the widely used and supported ModBus protocol. These important features ensure a smart future-proof investment.

Stockholm Water keeps hundreds of pump stations under tight control

Already in 1996, Stockholm Water began upgrading its sewage pump station with "intelligent" controllers. The drivers were maximal environmental protection and station availability, and reduced energy consumption. This experience highlighted common problems and key areas for improvement. Today, over 100 sewage pump stations in Stockholm use smarter ABS control logic, and all that we have learned in this process is now built into just one device, the ABS pump controller PC 441.

Monitoring and recording data

One of Stockholm Water's key requirements was to secure reliable data recording that could handle any periods of communication loss. Another request was monitoring parameters not strictly connected to operational processes, such as logging hydrogen sulfide gas levels in a station for safety reasons.

Personal safety

Yet another demand was a personnel safety routine. This function is activated, e.g. when someone switching on a light in the station starts a timer with a pre-set time. If any key on the panel is touched the timer is reset, and when the light is switched off the function stops. If this is not performed within a pre-set time an internal alarm is tripped as a reminder, and shortly thereafter a central alarm is generated.

Another demand on personnel safety was that no remote start of pumps was possible when the above function is active.

Good communication

One firm demand was that the controllers should use an open protocol supported by a majority of SCADA and telemetry suppliers. The ABS pump controller PC 441 supports both the Comli and ModBus communication protocols.

A unique range of control and monitoring functions to make your life easier

The wide range of pump and mixer control functions of the new ABS pump controller PC 441 is really impressive. With a combination of the functions illustrated below, just a few of those available, you can save energy and costs, avoid damaging water hammer, reduce pressure on the hydraulic and electrical network, as well gain numerous other benefits as indicated.

Heavy rainfall threatens city
Risk of flooding

The start/stop of the smart level derivate change function of the ABS pump controller PC 441 detects a quicker than normal raise of water level and starts pumping before the set start level, thereby preventing flooding.

As a safety precaution, the system also sends an SMS alert.

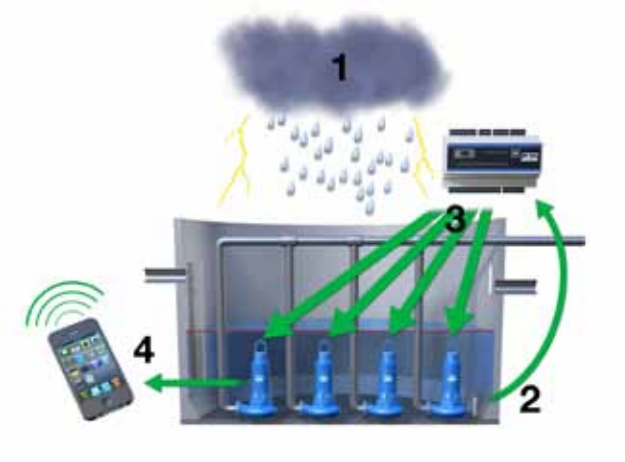

Breakdown of pump 1 after 5 000 running hours
Risk for total stop and flooding if second pump also breaks

The clever asymmetric start function of the ABS pump controller PC 441 has kept one pump running at much lower running hours thereby minimizing the risk for an immediate breakdown.

The system sends an SMS alert for pump to be changed at earliest convenience.

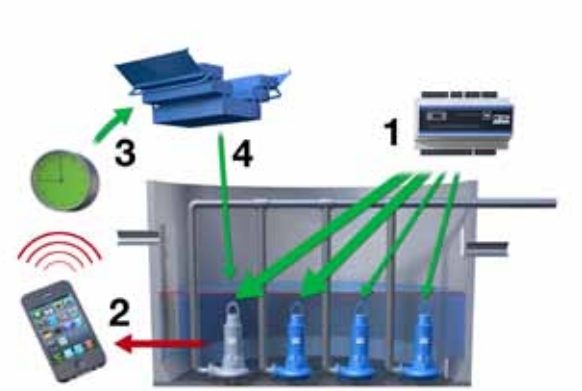

Empty the station before "rush hour"
Reducing energy costs by running pumps using off-peak electricity

The start/stop setting on the energy time setting function of the ABS pump controller PC 441 allows the pump to start and empty the station during lower-cost energy periods.

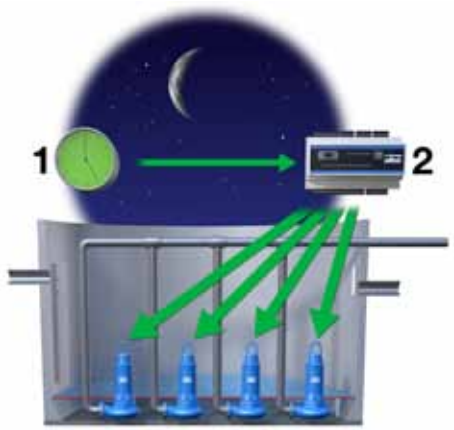

Reduce clogging by individual exercise runs
Reducing the risk of clogging by individual pump running schemes

The clever control functions of the ABS pump controller PC 441 allows different pumps in a station to be run independently, which can reduce the risk of pump clogging, for example.

Don't pump water higher than needed
Keep the start/stop levels at optimal height in order to save pumping energy

The start/stop levels can easily be changed via our AquaProg remote control to, e.g. raise the start/stop levels at periods with less rain. Higher start/stop levels mean that less energy is needed for pumping.

Don't choke your network and raise energy bills
Avoid water hammer and peak pressure on a network

The intelligent setting of individual start and stop levels for pumps and stations allows you to avoid water hammer and put less pressure on hydraulic and electrical networks. Each pump starts at the optimal time to help prevent flooding in the most efficient way.

The system sends an SMS alert at the risk of flooding.

A modular system to suit your particular applications

The ABS pump controller PC 441 forms the core of a modular system that can be configured to form the control and monitoring system for up to 4 pumps best suited to your particular applications. CAN-Bus is used for internal communication between the central controller and various monitoring modules. The selected system can be mounted in an ABS electrical cabinet to protect the modules from dirt and dust.

Typical modules and configurations of the ABS pump controller PC 441 are presented below.

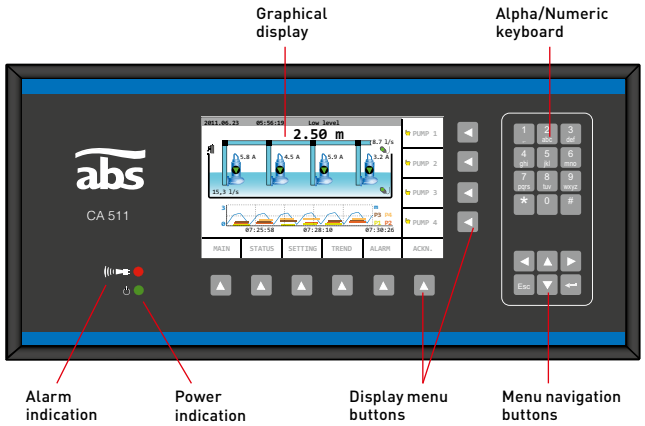

ABS operator panel
This is used in combination with the ABS pump controller PC 441 to allow its easy operation and configuration. You can access or view data in several formats: alphanumerical characters, animated graphical symbols and trend curves.

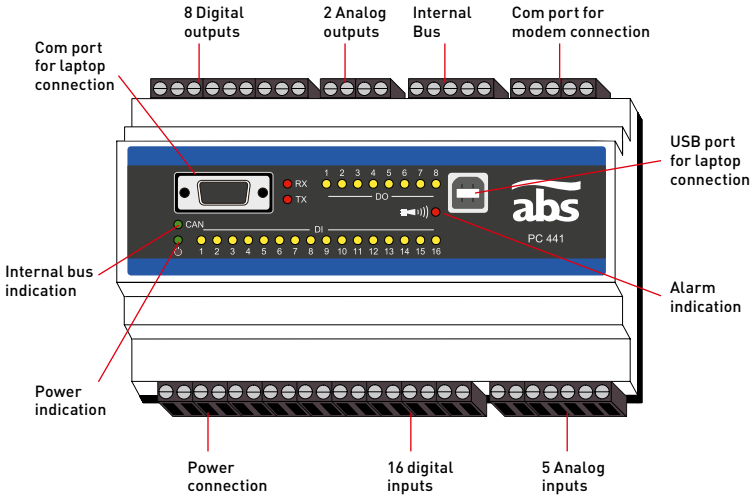

ABS pump controller PC 441
The ABS pump controller PC 441 can control and monitor up to 4 pumps and additional equipment in municipal pumping stations. It provides many advanced features to minimize operational costs and increase the availability of a pumping station.

ABS temperature monitoring module
This module allows temperature monitoring of up to 4 pumps with combined alarms (one alarm per pump) or up to 4 separate alarms using one module per pump.

ABS leakage monitoring module
Four signal inputs of this leakage monitoring module can be used in various ways to provide an alarm in the event of moisture detection (Di) in a range of submersible sewage pumps.

ABS electrical property measuring module
This module measures electrical properties for a complete pump station and/or one pump.

Wall-mounted electrical cabinet
An ABS pump controller PC 441 system can be protected in a compact ABS wall-mounted electrical cabinet tailored to the particular controller system selected.

Major features of the ABS pump controller PC 441

- Control and monitoring in one system
- Pump start/stop based on Level set-point incl. time delays
- Pump start/stop based on Speed of level change
- Pump start using Random start levels
- Pump start/stop based on Tariff control
- Pump stop after max. runtime setting
- Cyclic motion timer
- Pump alternation, Normal or Asymmetrical
- Emergency pump run timer and level sensor check on high float
- Advance level based in/outflow and pump capacity calculation
- VFD control logic with built-in PID controller
- 15 days log capability with 16 channels and 1 minute interval
- 4096 time-stamped events log capability
- Expandable with monitoring modules for Temperature, Moisture & Energy
- Comli and ModBus data communication support
- Local and/or remote firmware upgrade support
- Powerful PC tool for set-up, maintenance and backup
- VFD control logic with built-in pump capacity and in/outflow calculation functionality
- Sump mixer control logic
- Drain pump control logic

System overview of advanced monitoring of amperes and voltage, temperature and moisture per pump
The ABS operator panel and the three modules described above are connected to the ABS pump controller PC 441 via CAN-Bus interface.

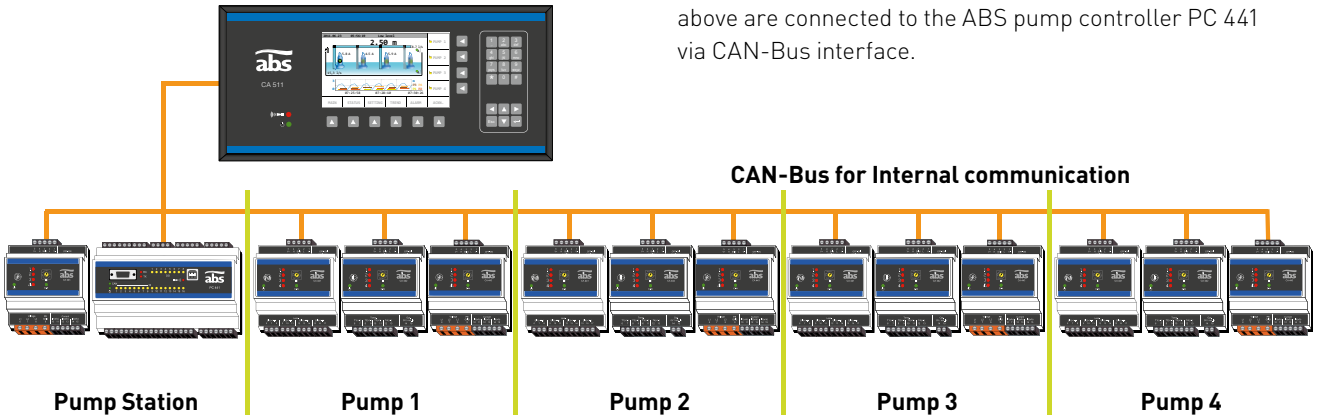

SULZER

A complete control and monitoring range

ABS control panel CP 112/212
For 1 or 2 pumps conforming to ATEX

ABS pump controller PC 242
For the control of 1–2 pumps

ABS pump controllers PC 111/211
For the control of 1 or 2 pumps

ABS control panel CP 116/216
For 1 or 2 pumps conforming to ATEX

ABS pump controller PC 441
For the control of up to 4 pumps

ABS control panel CP 221/441
CP 441 for advanced control of up to 4 pumps

Accessories include monitoring modules, level sensors, floats, modems, etc.
One or more of the above products are not available in certain markets.

2011-PB-PC441-en1 – www.pyramid.se

www.ABSEffeX.com

JointheABSEffeXRevolution